REVISION HISTORY	
REV	DESCRIPTION
1	INITIAL RELEASE

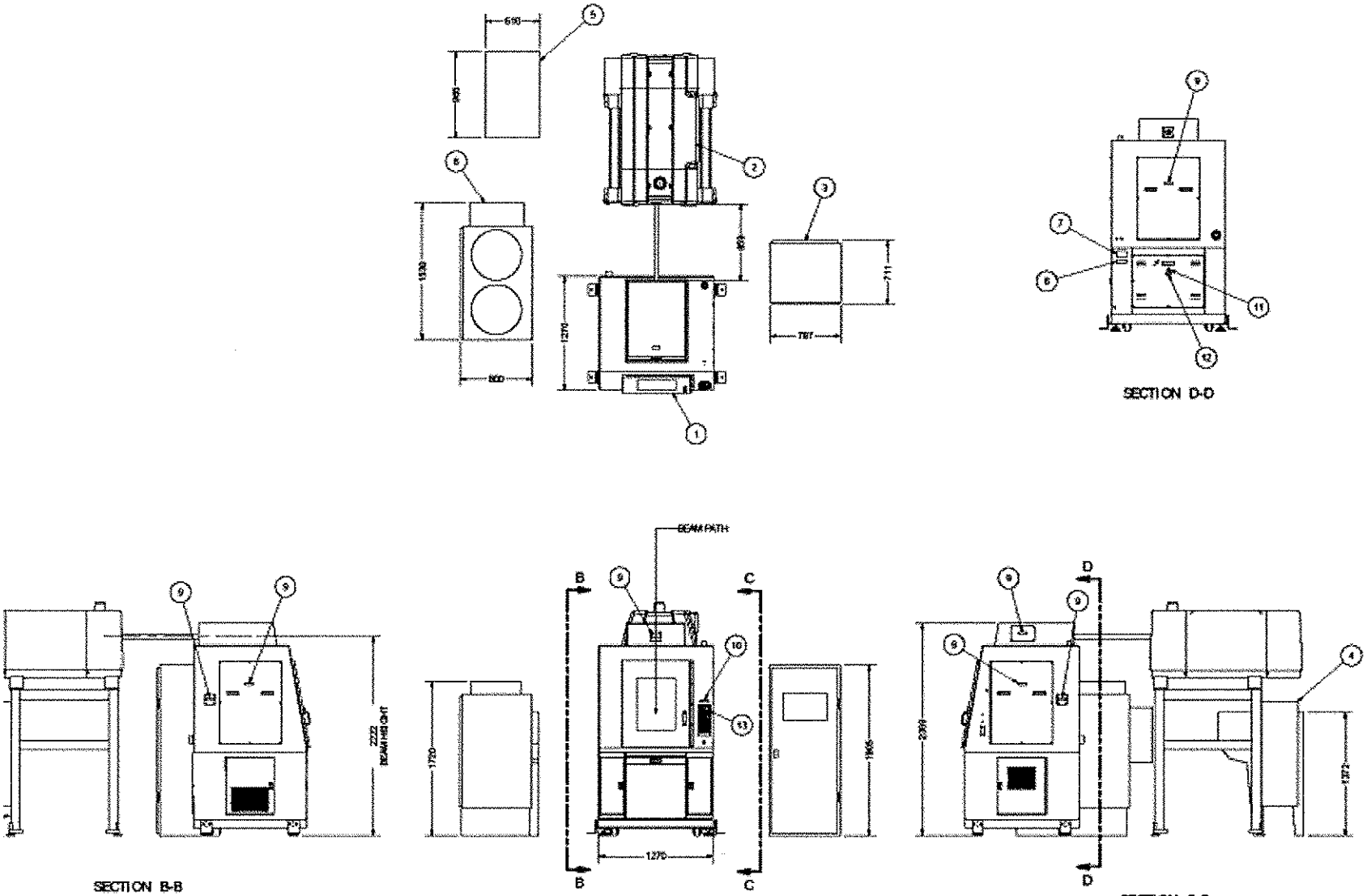

NOTES:

1. ITEMS SHOWN PLACED ARE REFERENCE ONLY.

PARTS LIST

ITEM	QTY	PART NUMBER	DESCR
1	1	-	WORKSTATION
2	1	-	DIODE LASER
3	1	-	POWER SUPPLY
4	1	-	AIR PANEL
5	1	-	FUME EXTRACTOR
6	1	-	CHILLER
7	1	100-3070-1	LABEL, IDENTIFICATION
8	1	100-3106-1	CLASS 1 LABEL
9	6	610000	DANGER - NON INTERLOCK
10	1	610002	DANGER - INTERLOCKED L
11	1	100-3027-1	LABEL, HIGH VOLTAGE SW
12	1	100-3028-1	LABEL, DANGER HIGH VOL
13	1	-	EMERGENCY STOP SWITCH

	NAME	DATE
DR	MARTIN	6/16/2009
CK		
ENG		
MFG		
QA		

MODEL	PART NUM
FINISH	

rofin

TOLERANCE UNLESS OTHERWISE SPECIFIED
.X ± 0.030 DIM ±
.XX ± 0.010 ANGLES ±
.XXX ± 0.005

CONFIG OUTLIN
S13

SCALE	SIZE	DRAWING N
NONE	D	216-002